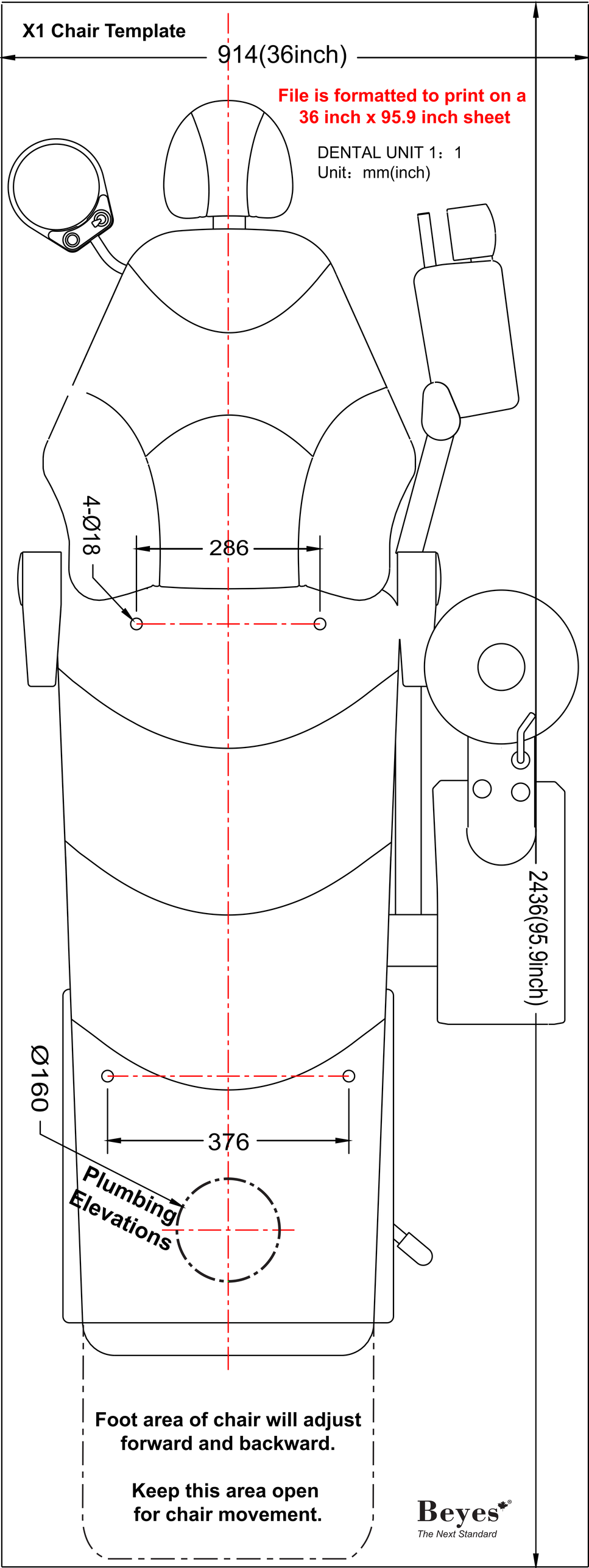X1 Chair Template